Continental Disc® Corporation

Preparation and Installation of the COMPOSITE Flat Seat Rupture Disc / UNISERT® or RHI Insert Holder Assembly

WARNING

USER SHOULD READ AND THOROUGHLY UNDERSTAND THESE INSTRUCTIONS BEFORE INSTALLING RUPTURE DISC. THESE INSTRUCTIONS DO NOT PURPORT TO ADDRESS ALL OF THE SAFETY FACTORS ASSOCIATED WITH THE RUPTURE DISC'S USE IN SERVICE. IT IS THE RESPONSIBILITY OF THE USER TO ESTABLISH APPROPRIATE SAFETY, HEALTH, AND TRAINING MEASURES FOR THEIR PERSONNEL INSTALLING, SERVICING, OR WORKING IN AN AREA WHERE RUPTURE DISC ASSEMBLIES ARE IN USE. SERVICE AND/OR MAINTENANCE ON OR AROUND THE RUPTURE DISC DEVICE MUST NOT BE PERFORMED WHILE THE DEVICE IS SUBJECTED TO OPERATING PRESSURES AND/OR TEMPERATURES.

IT IS THE USER'S SOLE RESPONSIBILITY FOR DESIGN AND PLACEMENT OF RUPTURE DISCS WITHIN THEIR FACILITY AND UPON THE EQUIPMENT UPON WHICH THE RUPTURE DISC OF USER'S SELECTION IS TO BE LOCATED. IT IS USER'S SOLE RESPONSIBILITY FOR THE DESIGN OF ADEQUATE VENTING AND INSTALLATION OF ADEQUATE VENT PIPING OR DIRECTIONAL FLOW AFTER RUPTURE OCCURS WITH THE RUPTURE DISC AS INTENDED. WHEN SIZE IS SPECIFIED, CONTINENTAL DISC CORPORATION ASSUMES THAT ADEQUATE PROVISIONS HAVE BEEN MADE BY PURCHASER FOR PROPER VENTING OF A SYSTEM TO RELIEVE THE SPECIFIC PRESSURE. LOCATE RUPTURE DISC WHERE PEOPLE OR PROPERTY WILL NOT BE EXPOSED TO THE SYSTEM DISCHARGE IN CASE OF RUPTURE. VENT TOXIC OR FLAMMABLE FUMES OR LIQUIDS TO A SAFE LOCATION TO PREVENT PERSONAL INJURY OR PROPERTY DAMAGE.

IT IS THE USER'S SOLE RESPONSIBILITY TO SPECIFY THE BURST PRESSURE RATING OF A RUPTURE DISC AT A COINCIDENT TEMPERATURE AT WHICH THE RUPTURE DISC IS TO BE USED. A RUPTURE DISC IS A TEMPERATURE SENSITIVE DEVICE. THE BURST PRESSURE OF THE RUPTURE DISC IS DIRECTLY AFFECTED BY ITS EXPOSURE TO THE COINCIDENT TEMPERATURE. GENERALLY, AS THE TEMPERATURE AT THE RUPTURE DISC INCREASES, THE BURST PRESSURE DECREASES; INVERSELY, AS THE TEMPERATURE AT THE RUPTURE DISC DECREASES, THE BURST PRESSURE MAY INCREASE. FAILURE TO PROPERLY UTILIZE A RUPTURE DISC AT THE SPECIFIED COINCIDENT TEMPERATURE COULD CAUSE PREMATURE FAILURE OR OVERPRESSURIZATION OF A SYSTEM.

THE INSTANTANEOUS RELEASE OF PRESSURE FROM THE RUPTURE DISC CAN CREATE VIOLENT NOISES DUE TO THE DISCHARGE AT SONIC VELOCITY. IT IS THE USER'S SOLE RESPONSIBILITY TO PROTECT AGAINST HEARING DAMAGE TO ANY BYSTANDERS.

RUPTURE DISCS AND TAGS ARE MADE OF METAL FOILS OF VARYING THICKNESS. THE METAL EDGES MAY BE SHARP. PERSONNEL INSTALLING OR EXAMINING THE RUPTURE DISCS SHOULD PROTECT AGAINST CUTS OR INJURY WHEN HANDLING THE RUPTURE DISC. DO NOT LIFT A RUPTURE DISC BY ITS ATTACHED TAG.

PARTICLES MAY BE DISCHARGED WHEN THE RUPTURE DISC RUPTURES. THESE PARTICLES MAY BE PART OF THE RUPTURE DISC ITSELF, OR OTHER ENVIRONMENTAL MATTER IN THE SYSTEM. IT IS THE USER'S SOLE RESPONSIBILITY TO ASSURE THAT THESE PARTICLES ARE DIRECTED TO A SAFE AREA TO PREVENT PERSONAL INJURY OR PROPERTY DAMAGE.

THERE IS NO GUARANTEE OF RUPTURE DISC LIFE. SUCH LIFE SPAN IS AFFECTED BY CORROSION, CREEP AND FATIGUE, AND PHYSICAL DAMAGE. THESE CONDITIONS WILL DERATE THE RUPTURE DISC TO A LOWER SET PRESSURE. THE CUSTOMER AND/OR USER SHOULD BE PREPARED TO HANDLE PREMATURE FAILURE OF THE RUPTURE DISC. THE MEDIA OR OTHER ENVIRONMENTAL CONDITIONS SHOULD NOT ALLOW ANY BUILDUP OR SOLIDIFICATION OF MEDIA TO OCCUR ON A RUPTURE DISC. THIS MAY INCREASE THE PRESSURE SETTING OF THE RUPTURE DISC.

CUSTOMER AND/OR ITS INSTALLER SHALL BE SOLELY RESPONSIBLE FOR THE PROPER INSTALLATION OF SELLER'S HOLDERS AND RUPTURE DISCS INTO A SYSTEM. CUSTOMER AND/OR ITS INSTALLER SHALL BE SOLELY RESPONSIBLE FOR IMPROPER INSTALLATION AND PHYSICAL DAMAGE RESULTING THEREFROM, INCLUDING BUT NOT LIMITED TO, DAMAGE RESULTING FROM LEAKAGE, IMPROPER TORQUING OR SEATING OF A RUPTURE DISC OR FAILURE TO FOLLOW INSTALLATION INSTRUCTIONS WHERE PROVIDED.

RUPTURE DISCS ARE PRECISION SAFETY DEVICES AND MUST BE INSTALLED PROPERLY. RUPTURE DISCS MUST BE INSTALLED BY TRAINED, KNOWLEDGEABLE INSTALLERS AND ONLY WITHIN ENVIRONMENTS SUITABLE AND APPROPRIATE FOR A RUPTURE DISC. CARE MUST BE USED IN A FACILITY'S DESIGN TO PROTECT BOTH THE RUPTURE DISC FROM INADVERTENT DAMAGE WHICH COULD CAUSE ITS PREMATURE RELEASE AND TO PROTECT INDIVIDUALS EXPOSED TO HAZARDS CREATED BY SUCH SUDDEN RELEASE.

PROPER INSTALLATION OF A RUPTURE DISC IS CRITICAL TO PERFORMANCE AND TO SAFETY. FAILURE TO PROVIDE PROPER SEATING OF A RUPTURE DISC MAY AFFECT RUPTURE DISC PERFORMANCE, BURST PRESSURE ACCURACY AND MAY RESULT IN ITS PREMATURE FAILURE.

I. Safety Precautions Before Installation

1. The COMPOSITE Flat Seat rupture disc is a precision instrument and must be handled with extreme care. Rupture discs should be installed only by qualified personnel familiar with rupture discs and proper piping practices.

2. Do not install rupture disc if there is any damage in the dome area. A damaged rupture disc is any rupture disc with visible nicks or dents in the dome.

3. Continental Disc Corporation does not recommend reinstalling a rupture disc that has been removed from the holder as reinstallation may adversely affect the joint sealing capabilities and/or performance of the rupture disc.

II. Preparation of Holders for Installation

New Installation

Clean all foreign material from the rupture disc sealing area of both the holder inlet and outlet.

Replacement Installation

1. If the Burst Disc Indicator (B.D.I.®) Alarm System is used, disconnect the alarm strip from the monitor by unplugging the B.D.I. connector from the lead wire connector.

2. Remove the holder from the system and place on a flat surface.

3. Disassemble the holder by loosening the pre-assembly screws, or by removing the pre-assembly cap screws on the holder outlet. Lift the holder outlet up and set aside; then remove the burst rupture disc.

4. Clean the rupture disc sealing area of both the holder inlet and outlet. These surfaces must be completely clean and free of all rust, corrosion, and foreign material to ensure a proper seal. Use of solvents, steel wool, or fine emery cloth is permissible. Do not re-machine. Do not use scraper or abrasives.

5. Inspect the rupture disc sealing area for nicks, scratches, or pitting. If any of these conditions are present, consult the factory for repair.

6. Remove any adhered gasket material from previous installation.

III. Assembly of the Rupture Disc and Holder

Component parts of the holder assembly are illustrated in the proper installation sequence.

SIZES 1" THROUGH 12" (See Figure A)

1. Carefully remove and discard any shipping protectors furnished with rupture discs or holder. **DO NOT INSTALL A SHIPPING PROTECTOR IN A HOLDER ASSEMBLY.**

2. Place the holder outlet on a flat surface with the alignment pins pointing up. Sizes 6” and 8” RHI Holder outlets must be elevated from the work surface approximately 1” to avoid damage to the rupture disc dome during assembly. NOTE: Alignment pin arrangement will vary depending on size.

3. Match the notches in the rupture disc with the shape of the pins. Place the rupture disc over the pins with the dome side down. The rupture disc tag will be face down.

4. Match the holes in the holder inlet with the shape of the pins in the holder outlet. Position the holder inlet carefully onto the alignment pins as shown, ensuring that the rupture disc is not damaged.

5. Fasten the assembly together by tightening the pre-assembly screws or by replacing and tightening the pre-assembly cap screws.

Figure 'A'

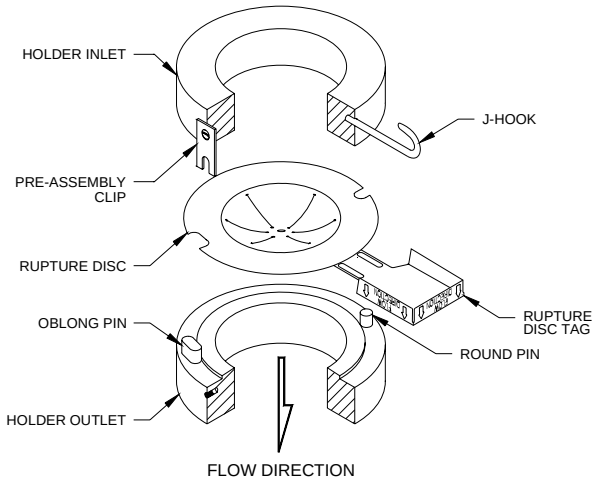

6. Invert assembled rupture disc and holder. Check all flow arrows for proper flow direction.

SIZES 14" THROUGH 36" (See Figure B)

1. Carefully remove and discard any shipping protectors furnished with rupture discs or holder. **DO NOT INSTALL A SHIPPING PROTECTOR IN A HOLDER ASSEMBLY.**

2. Place the holder inlet on a flat surface.

3. Place the COMPOSITE rupture disc on the holder inlet opening with the dome facing up as illustrated.

4. Align and lower the holder outlet carefully onto the holder inlet.

5. Fasten the assembly together by installing and tightening the pre-assembly cap screws.

IV. Installation of the Holder Assembly Into the System (See Figure C)

1. If the B.D.I. Alarm System is to be used, see the Universal B.D.I. Assembly installation instructions for additional details.

2. Before placing the assembly into the system, ensure that the companion flange gasket surfaces are clean and free of all rust, corrosion, and foreign material.

3. On sizes 1" through 12", a J-Hook is provided on the holder inlet to ensure correct installation of the assembly relative to flow direction. Prior to installation of the assembly, the corresponding inlet companion flange must be drilled to accommodate the J-Hook. Refer to the J-Hook Installation Guide for locating and drilling specifications.

4. Install the holder assembly and customer furnished gaskets **WITH ALL FLOW ARROWS POINTING IN THE PROPER FLOW DIRECTION** and the J-Hook (if applicable) inserted into the drilled companion flange.

5. Install lightly oiled free running studs and nuts to finger tightness. Using a cross torquing pattern (see Figure D), torque each nut with a calibrated torque wrench at 20% increments of recommended torque value (see Table 1). Repeat 20% increments and cross torquing pattern until final torque value is achieved. Recheck all nuts in rotational sequence at final torque value. These values are based on using gasket materials having a gasket factor of 2.75, gasket seating stress of 3,700 psi, and stud and nut material per ASME SA193-B7 and SA194-2H respectively, with a stress of up to 25,000 psi. The use of studs and nuts with lower strength may prove unsatisfactory.

Figure 'B'

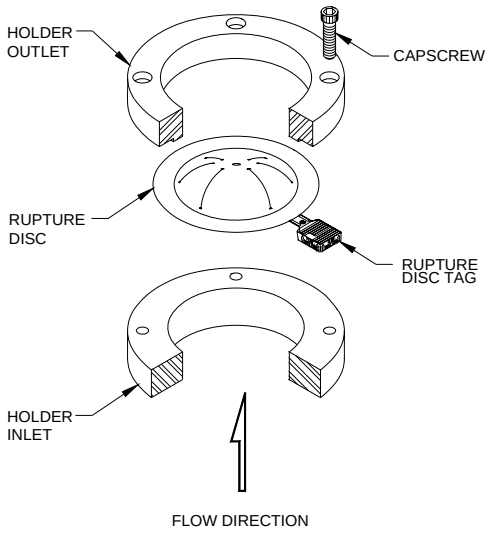

Figure 'C'

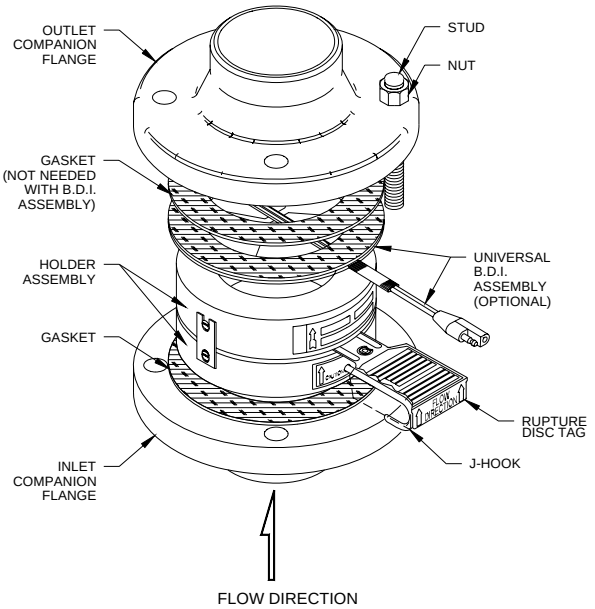

Figure 'D'

EXAMPLE OF
BOLT TORQUE SEQUENCE

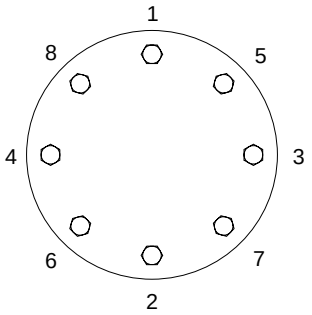

8 - BOLTS

V. Preventative Maintenance

1. Risk assessment and an annual rupture disc replacement are recommended. Rupture disc service life is determined by system operating conditions. The effects of severe pressure/vacuum cycles, corrosion, temperature variations, or other adverse conditions must be evaluated by the user through actual service experience to determine optimal service life.

2. **IF THE RUPTURE DISC IS NOT REPLACED PERIODICALLY WHEN EXPOSED TO THESE CONDITIONS, PREMATURE FAILURE OF THE RUPTURE DISC MAY OCCUR, THEREBY DISCHARGING THE PROCESS MEDIA.**

3. To avoid extended downtime, maintain three spare rupture discs in stock at all times for each holder in use. The number of spares required ultimately will be determined by service conditions.

VI. Customer Service

If you wish to discuss your application, installation, or maintenance, please contact the Customer Service Department at one of the addresses shown on the last page of these instructions.

COMPOSITE Rupture Disc incorporates U.S. Patent No.: 3,445,032.

Burst Disc Indicator (B.D.I.) Alarm System incorporates U.S. patent no. Re. 34,308 and 4,408,194; Australia patent no. 539415; Germany patent no. 3174227.0; Belgium, France and United Kingdom patent no. EP 0 033 867; Canada patent no. 1199990; Japan patent no. 2032464.

B.D.I. ALARM SYSTEM OPERATING LIMITS

TEMPERATURE: -40° F to + 400° F
(-40° C to + 204° C)

MAX CURRENT: 50 Milli Amps
MAX VOLTAGE: 24 VDC RMS

BURST DISC INDICATOR (B.D.I.®): Sizes 25mm through 900mm (1 inch through 36 inches)
Marked: II 2 G D EEx ia IIC
(Tamb = -40° C to +204° C)

EC Type Examination Certificate: ITSO3ATEX 21357U

FULFILLS THE REQUIREMENTS OF DIRECTIVE 94/9/EC (ATEX) FOR: COMPONENTS of equipment and protective systems intended for use in potentially explosive atmospheres.

APPLIED HARMONIZED STANDARD: EN 50 014: 1997 + Amds 1 & 2 General Requirements
EN 50 020: 2002, Intrinsic Safety

ADDITIONAL INFORMATION: Conformity assessment performed by Notified Body no. 0359,
ITS Testing and Certification Limited, Leatherhead, Surrey, UK.

TABLE 1

Recommended Torque Values for Composite Flat Seat
Rupture Discs Sizes 1" Through 36"

SIZE		COMPANION FLANGE RATING			RECOMMENDED TORQUE VALUE		SIZE		COMPANION FLANGE RATING			RECOMMENDED TORQUE VALUE	
IN	MM	ANSI	DIN	JIS	FT•LB	N•m	IN	MM	ANSI	DIN	JIS	FT•LB	N•m
1	25	150	---	---	35	47	6	150	150	---	---	120	163
		---	10/16	---	33	45			---	10/16	10	126	171
		---	---	10/16/20	44	60			---	---	16/20	92	125
		300/600	---	---	65	88			300	---	---	120	163
		---	25/40	---	49	66			---	25/40	---	227	308
		---	---	30/40	66	89			---	---	30	151	205
1-1/2	40	150	---	---	35	47			600	---	---	275	373
		---	10/16	10/16/20	44	60			---	---	40	260	352
		300/600	---	---	120	163	8	200	150	10	---	130	176
		---	25/40	---	101	137			---	16	10	91	123
		---	---	30/40	126	171			---	---	16/20	100	136
2	50	150	---	---	65	88			300	---	---	180	244
		---	10/16	10	66	89			---	25	30	194	263
		---	---	16/20	33	45			---	40	---	219	297
		300/600	---	---	65	88			600	---	---	231	313
		---	25/40	---	131	178	10	250	150	---	---	185	251
		---	---	30/40	66	89			---	10	---	166	225
3	80	150	---	---	65	88			---	---	10	183	248
		---	10/16	10	33	45			---	16	16/20	200	271
		---	---	16/20	41	56			300	---	---	275	373
		300/600	---	---	120	163			---	25	---	390	529
		---	25/40	---	101	137			---	40	30	433	587
		---	---	30/40	126	171			600	---	---	344	466
4	100	150	---	---	65	88	12	300	150	---	---	185	251
		---	10/16	10	66	89			---	10	---	166	225
		---	---	16/20	82	111			---	---	10	137	186
		300	---	---	120	163			---	16	---	200	271
		---	25/40	---	126	171			---	---	16/20	150	203
		---	---	30	139	188			300	---	---	375	508
		600	---	---	180	244			---	25	---	354	480
		---	---	40	178	241			---	---	30	394	534
									600	---	---	332	450

TABLE 1

Recommended Torque Values for Composite Flat Seat
Rupture Discs Sizes 1" Through 36"

SIZE		DISC RATING	COMPANION FLANGE RATING				RECOMMENDED TORQUE VALUE	
IN	MM	(PSIG)	ANSI	MSS-SP44	DIN	JIS	FT•LB	N•m
14	350	up to 100	150	---	---	---	220	298
		up to 100	---	---	10	---	130	176
		up to 100	---	---	---	10	143	194
		up to 100	---	---	16	---	156	211
		up to 100	---	---	---	16/20	195	264
		100 to 275	150	---	---	---	275	373
		100 to 275	---	---	10	---	162	220
		100 to 275	---	---	---	10	179	243
		100 to 275	---	---	16	---	195	264
		100 to 275	---	---	---	16/20	244	331
		up to 350	300	---	---	---	375	508
		up to 350	---	---	25	30	492	667
		up to 350	---	---	40	---	541	733
16	400	up to 100	150	---	---	---	220	298
		up to 100	---	---	10	10	208	282
		up to 100	---	---	16	---	234	317
		up to 100	---	---	---	16/20	260	352
		100 to 275	150	---	---	---	275	375
		100 to 275	---	---	10	10	260	352
		100 to 275	---	---	16	---	292	396
		100 to 275	---	---	---	16/20	325	441
		up to 350	300	---	---	---	485	658
		up to 350	---	---	25	---	630	854
		up to 350	---	---	---	30	461	625
		up to 350	---	---	40	---	687	931
18	450	up to 100	150	---	---	---	300	407
		up to 100	---	---	---	10	202	274
		up to 100	---	---	---	16/20	252	342
		100 to 275	150	---	---	---	375	508
		100 to 275	---	---	---	10	315	427
		100 to 275	---	---	---	16/20	394	534
20	500	up to 100	150	---	---	---	300	407
		up to 100	---	---	10	10	252	342
		up to 100	---	---	16	16/20	315	427
		100 to 275	150	---	---	---	375	508
		100 to 275	---	---	10	10	394	534
		100 to 275	---	---	16	16/20	492	667
24	600	up to 100	150	---	---	---	425	576
		up to 100	---	---	10	---	361	489
		up to 100	---	---	---	10	335	454
		up to 100	---	---	16	---	442	599
		up to 100	---	---	---	16/20	401	544
		100 to 275	150	---	---	---	485	658
		100 to 275	---	---	10	---	516	700
		100 to 275	---	---	---	10	573	776
		100 to 275	---	---	16	---	630	854
		100 to 275	---	---	---	16/20	687	931

TABLE 1

Recommended Torque Values for Composite Flat Seat
Rupture Discs Sizes 1" Through 36"

SIZE		DISC RATING	COMPANION FLANGE RATING				RECOMMENDED TORQUE VALUE	
IN	MM	(PSIG)	ANSI	MSS-SP44	DIN	JIS	FT•LB	N•m
28	700	up to 75	---	150	---	---	375	508
		up to 75	---	---	10	---	372	504
		up to 75	---	---	---	10	413	560
		up to 75	---	---	16	---	455	617
		up to 75	---	---	---	16	537	728
		up to 75	---	---	---	20	620	841
		75 to 275	---	150	---	---	485	658
		75 to 275	---	---	10	---	481	652
		75 to 275	---	---	---	10	535	725
		75 to 275	---	---	16	---	588	797
		75 to 275	---	---	---	16	695	942
		75 to 275	---	---	---	20	802	1087
30	750	up to 75	---	150	---	---	395	536
		up to 75	---	---	---	10	435	590
		up to 75	---	---	---	16	566	767
		up to 75	---	---	---	20	755	1024
		75 to 275	---	150	---	---	485	658
		75 to 275	---	---	---	10	535	725
		75 to 275	---	---	---	16	695	942
		75 to 275	---	---	---	20	927	1257
32	800	up to 75	---	150	---	---	640	868
		up to 75	---	---	10	---	588	797
		up to 75	---	---	---	10	504	683
		up to 75	---	---	16	---	705	956
		up to 75	---	---	---	16	882	1196
		up to 75	---	---	---	20	1019	1382
		75 to 275	---	150	---	---	875	1186
		75 to 275	---	---	10	---	804	1090
		75 to 275	---	---	---	10	689	934
		75 to 275	---	---	16	---	964	1307
		75 to 275	---	---	---	16	1205	1634
		75 to 275	---	---	---	20	1393	1889
36	900	up to 75	---	150	---	---	665	902
		up to 75	---	---	10	10	598	811
		up to 75	---	---	16	---	838	1136
		up to 75	---	---	---	16	1047	1419
		up to 75	---	---	---	20	1210	1640
		75 to 275	---	150	---	---	875	1186
		75 to 275	---	---	10	10	787	1067
		75 to 275	---	---	16	---	945	1281
		75 to 275	---	---	---	16	1181	1601
		75 to 275	---	---	---	20	1365	1851

Continental Disc® Corporation

Performance Under Pressure®

TÜV CERT ISO 9001-2000

Certified Quality System
First Certified In 1992

ASME Code Symbol Stamp
If stamped, this product is built in accordance with the requirements of the ASME Boiler and Pressure Vessel Code, Section VIII, Division 1.

China Manufacture License
Products are in full compliance with the provisions of the Peoples Republic of China Import Regulations for Boiler and Pressure Vessel safety devices.

3A Sanitary Standards Stamp
If stamped, this product is in full compliance with the 3A standards, Serial #60-00, of the International Association of Milk, Food, and Environmental Sanitarians, Inc.

European Union CE Mark Type Approval Stamp
If stamped, this product is certified to conform to the essential requirements of the Pressure Equipment Directive.

Continental Disc Corporation has representatives located throughout the world.
Contact the C.D.C. office nearest you for the authorized representative in your area.

CORPORATE HEADQUARTERS

Continental Disc Corporation

3160 W. Heartland Drive
Liberty, Missouri 64068-3385 USA
Phone: (816) 792-1500
FAX: (816) 792-2277 / 5447
E-mail: pressure@contdisc.com
Website: www.contdisc.com

THE NETHERLANDS

Continental Disc Corporation
Energieweg 20
2382 NJ Zoeterwoude-Rijndijk
The Netherlands
Phone: +(31) 71-5412221
FAX: +(31) 71-5414361
E-mail: cdcnl@contdisc.com

UNITED KINGDOM

Continental Disc UK Ltd.
Unit C, The Business Centre
Faringdon Avenue, Harold Hill
Romford, Essex RM3 8EN
United Kingdom
Phone: +(44) 1708-386444
FAX: +(44) 1708-386486
E-mail: cduk@contdisc.com

CHINA

Continental Disc Corporation
Room 910, Tower B, COFCO Plaza
No. 8 JianGuoMenNei Avenue
Beijing (100005)
P.R. China
Mobile: +(86) 137 0103 8871
E-mail: cdcchina@contdisc.com

DUBAI

Continental Disc Corporation
P. O. Box 2234
Dubai, U.A.E.
Phone: +(971) 43214490
Fax: +(971) 43438840
Mobile: +(971) 508129525
E-mail: kannan@contdisc.com